LIGHTING PLOT: UP END DOWN

Venue: LA FABRIKA

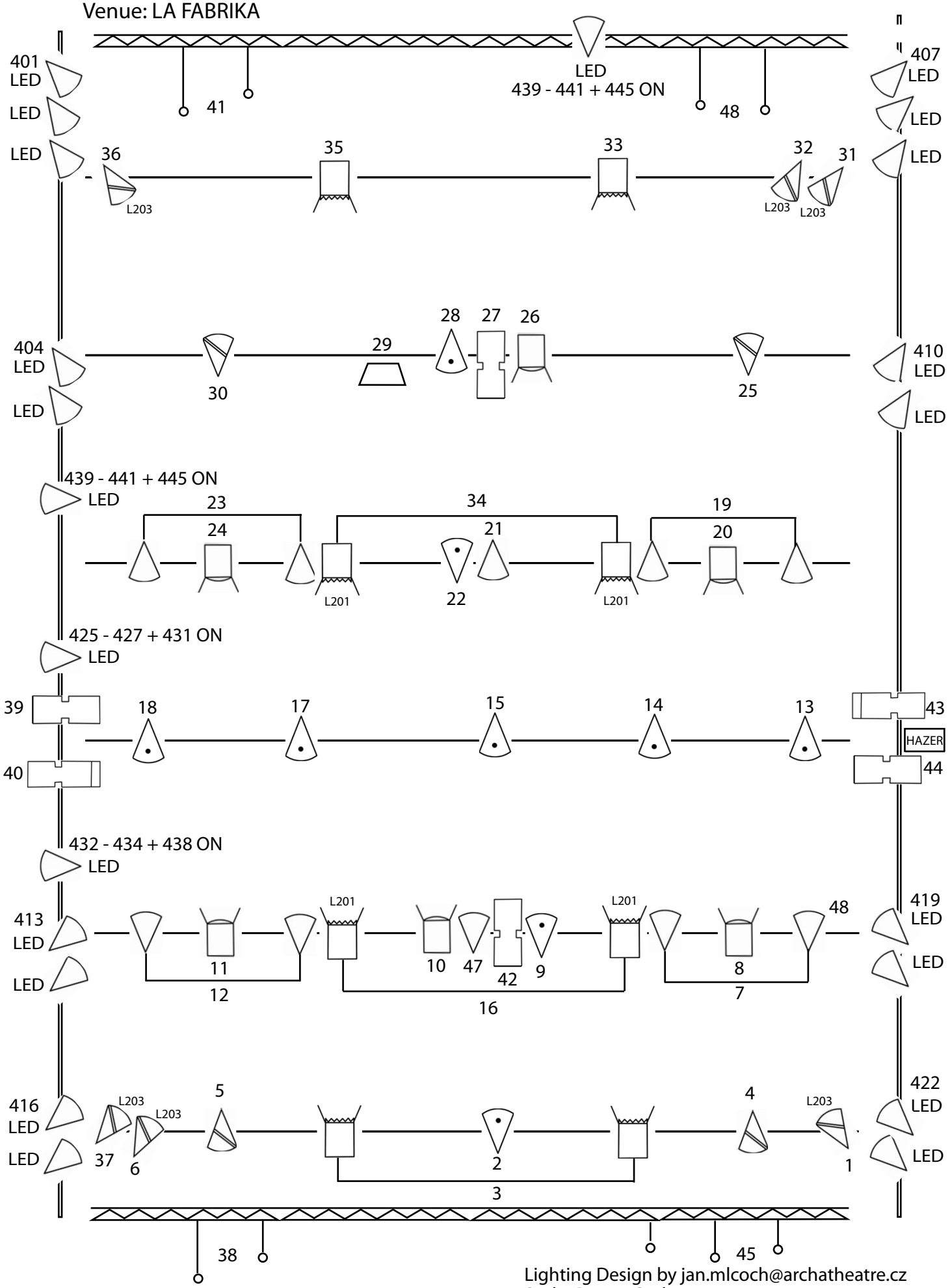

Lighting Design by jan.mlcoch@archatheatre.cz

Scale: Do not Scale